TOMOE EXCELLENCE IN HYDRODYNAMICS

Triple Offset Process Valve

TT2

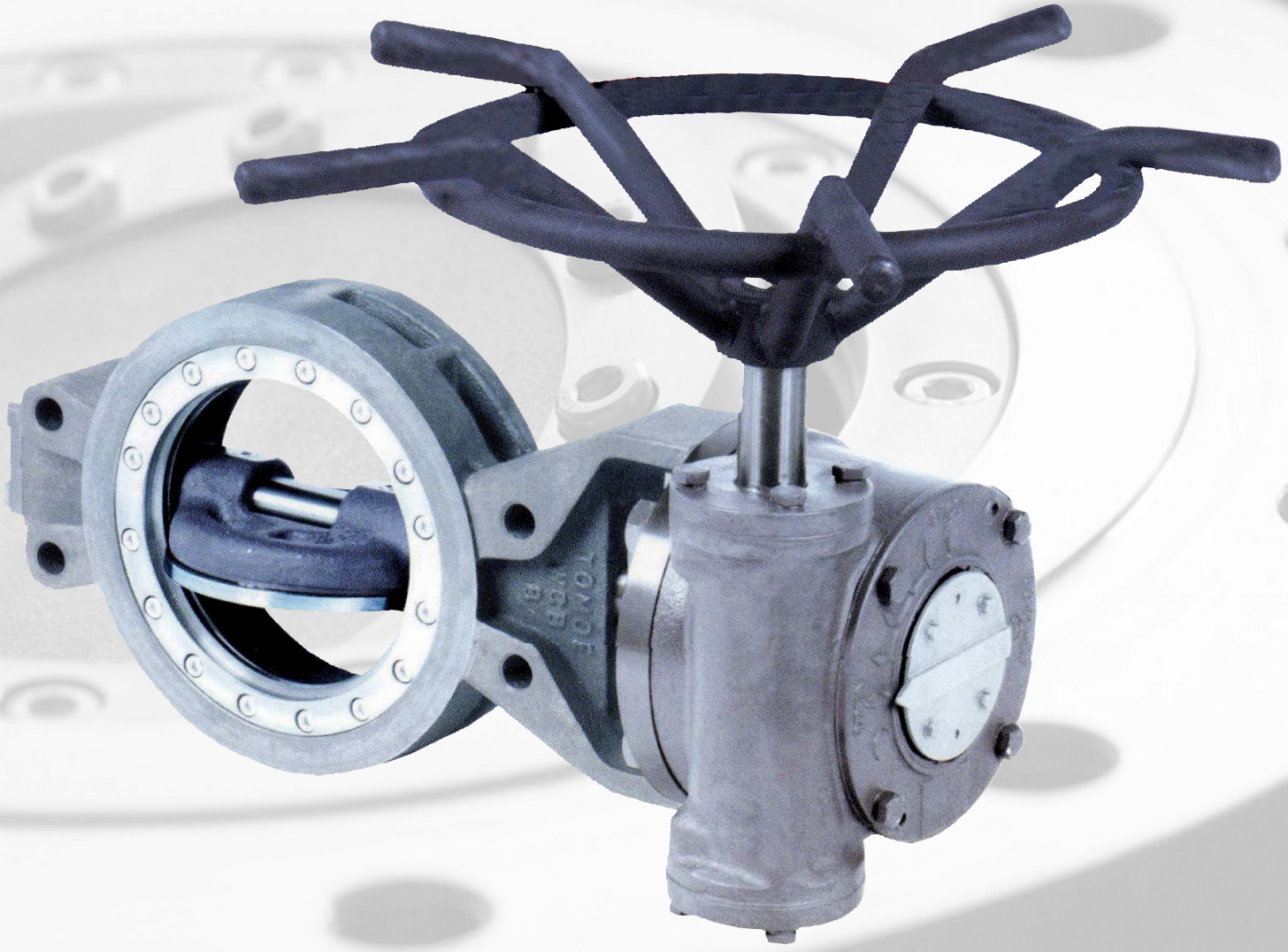

High performance valve delivering long life and positive shut-off in arduous conditions:

- Zero-leakage with metal seat
- Compact, lightweight design
- Fully field replaceable seat and seal design
- Longer life cycle
- Fire safe certification to API607 5th Edition

www.tomoeeurope.com

TOMOE

Always at the leading edge

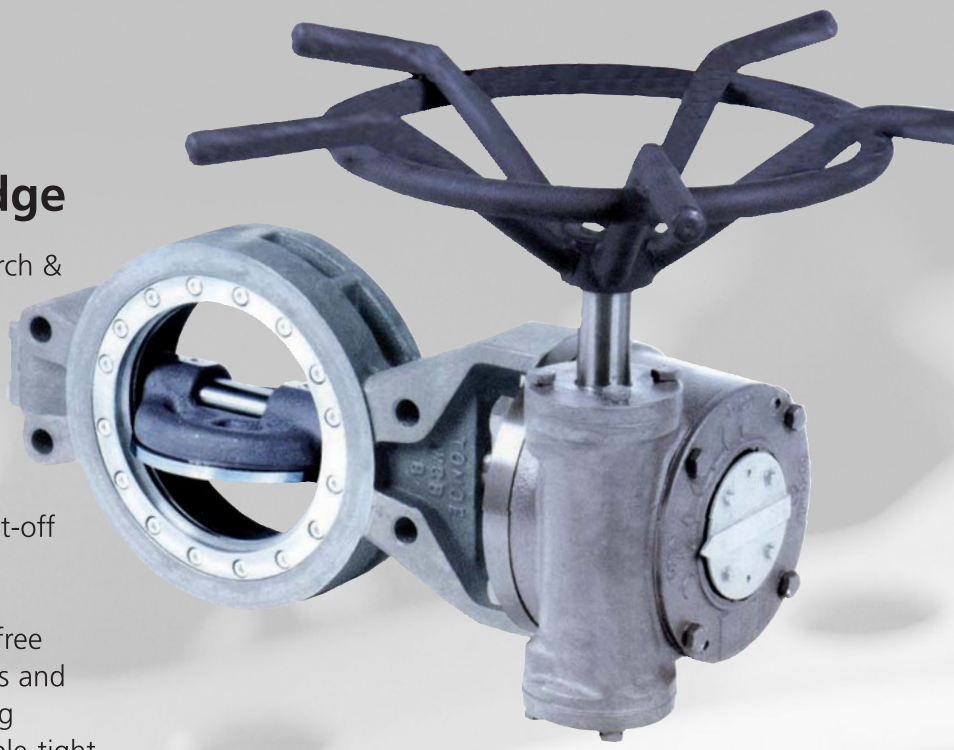

Through an extensive commitment to Research & Development, TOMOE has remained at the leading edge of valve design for more than 50 years. The TT2 Triple Offset process valve is the result of advanced technology design and stringent testing to develop a valve that meets the high performance demands of applications where long life and positive shut-off under arduous conditions is essential.

The TT2 inherits the torque sealing, friction-free sealing design of other valves in the TT series and the unique triple offset and ellipsoidal sealing geometry guarantees zero leakage and bubble-tight shut-off.

In addition, the compact, lightweight design of the TT2 triple offset valve has revolutionised design and maintenance of piping systems in the OPC industry. Smaller and lighter than traditional ball, globe and gate valves, the TT2 features a fully field-replaceable seat and seal design for increased plant efficiency and reduced cost of ownership.

Available in Wafer, Lugged and Double Flanged type body styles to 150 lb and 300 lb pressure ratings, the TT2 triple offset valve has fire safe certification to AP1607 5th Edition, making it inherently safe in high risk industry applications.

TT2 Triple Offset Process Valve

- Zero-leakage with metal seat
- Compact, lightweight design
- Fully field replaceable seat and seal design
- Longer life cycle
- Fire safe certification to API607 5th Edition

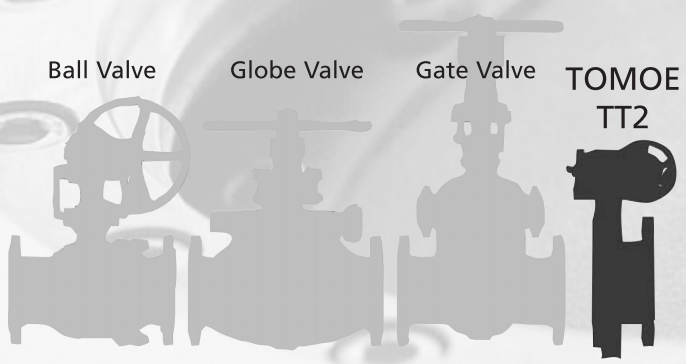

General Specifications: Class 150/300 Range

Design:	API 609 Cat.B, ASME B 16.34
Pressure Rating:	ASME B16.34 Class 150 & 300 Range, API 609 Class 150 & 300 Range
Flange Connection:	ASME B 16.5, JPI, JIS, BS and DIN
Nominal Diameter:	3" to 24"
Body Style:	Wafer, Lugged and Double Flanged short & long

Standard Materials:

Body:	ASTM A216 WCB or ASTM A351 CF8M
Disc:	ASTM A216 WCB or ASTM A351 CF8M
Disc Seal:	Stainless steel type 316
Stem:	ASTM 564 type 630 H1150 + H1150
Body Seat:	Stainless steel type 316 with graphite laminate.

Pressure-Temperature Ratings

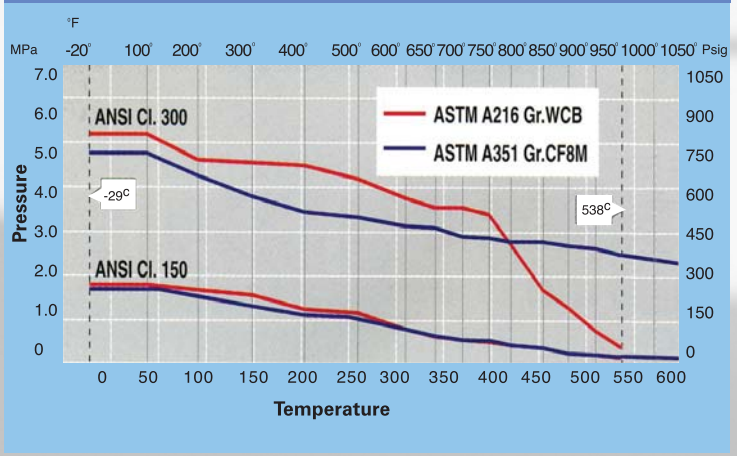

Options Available

Wafer Type

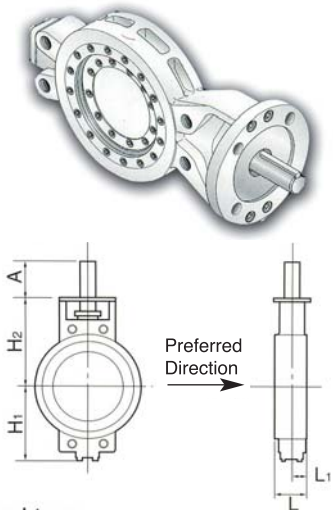

Lugged Type

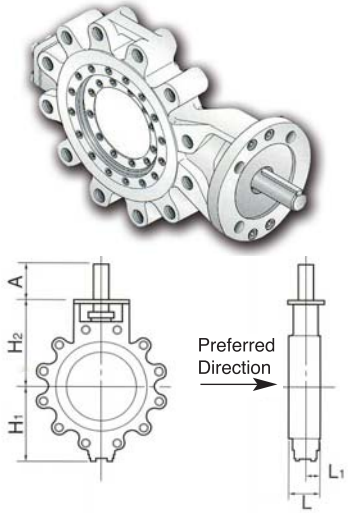

Double Flanged Type

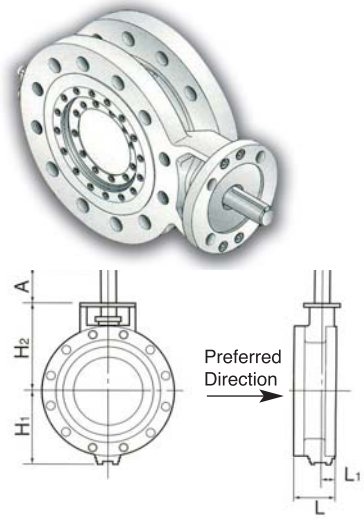

Dimensions (mm) Class 150 lb

Valve Size		H_1	H_2	A	L_1	L			Approx Weight (kg)		
mm	inch					Wafer Type	Lugged Type	Flanged Type	Wafer Type	Lugged Type	Flanged Type
80	3	121	159	34	29	48	48	114	7	7	15
100	4	145	194	34	32	54	54	127	11	13	21
150	6	190	242	34	35	57	57	140	18	21	35
200	8	200	248	64	39	64	64	152	27	29	49
250	10	246	326	64	43	71	71	165	45	52	77
300	12	282	376	79	49	81	81	178	66	76	117
350	14	308	400	79	52	92	92	190	82	91	155
400	16	346	470	79	63	102	102	216	107	134	194
450	18	384	510	79	68	114	114	222	160	185	237
500	20	411	531	79	79	127	127	229	188	225	312
600	24	470	643	117	89	154	154	267	306	393	432

Dimensions (mm) Class 300 lb

Valve Size		H_1	H_2	A	L_1	L			Approx Weight (kg)		
mm	inch					Wafer Type	Lugged Type	Flanged Type	Wafer Type	Lugged Type	Flanged Type
80	3	121	159	34	29	48	48	114	7	9	17
100	4	145	194	34	32	54	54	127	11	13	28
150	6	189	276	64	37	59	59	140	23	24	48
200	8	218	285	79	44	73	73	152	37	44	78
250	10	260	355	79	48	83	83	165	59	71	114
300	12	306	428	79	53	92	92	178	89	105	175
350	14	341	460	79	61	117	117	190	113	163	235
400	16	374	518	109	71	133	133	216	166	225	302
450	18	401	574	127	79	149	149	222	231	327	407
500	20	442	602	136	85	159	159	229	292	375	491
600	24	515	678	136	100	181	181	267	416	560	724

Class 150 lb Torques (Nm)

Valve Size		Positive Pressure		Reverse Pressure		Max. Allowance Torque	Min. Design Pressure (MPa)
mm	Inch	Opening Torque	Shut off Torque	Opening Torque	Shut off Torque		
80	3	90	80	50	120	225	2.0
100	4	120	110	70	150	323	2.0
150	6	150	140	90	260	466	2.0
200	8	350	260	105	445	631	2.0
250	10	600	500	300	900	1091	2.0
300	12	960	800	400	1200	1832	2.0
350	14	1400	1200	800	1600	1832	1.5
400	16	2000	1800	850	2700	3733	1.0
450	18	2900	1900	1050	3650	4359	1.0
500	20	3785	2400	1600	4500	6579	1.0
600	24	6535	3240	2760	7100	10779	1.0

Class 300 lb Torques (Nm)

Valve Size		Positive Pressure		Reverse Pressure		Max. Allowance Torque	Min. Design Pressure (MPa)
mm	Inch	Opening Torque	Shut off Torque	Opening Torque	Shut off Torque		
80	3	150	135	75	175	225	3.5
100	4	200	170	105	230	323	3.5
150	6	390	350	200	400	679	3.5
200	8	770	700	500	1080	1257	3.0
250	10	1280	1100	710	1530	1832	3.0
300	12	2260	1600	1320	2470	3733	3.0
350	14	3170	1900	1840	3190	4359	3.0
400	16	5920	3730	2940	5710	7177	2.5
450	18	9000	4600	4200	8000	13809	2.5
500	20	11440	5670	5560	9860	14795	2.5
600	24	19100	8500	8340	15420	19637	2.5

These torque tables show the values at the maximum pressure rating and are linear with pressure. Do not use the values below the min. design pressure when calculating torques. If in doubt contact Tomoe.

TOMOE valves can be found in operation in a vast range of industries worldwide, making a valuable contribution to overall process efficiency

Steel

Oil & Gas

Chemical

Power

HVAC

Water Treatment

Food

Beverage

Desalination

Irrigation

TOMOE
PERFORMANCE BUTTERFLY VALVES

Tomoe Valve Ltd, Clearwater Rd
Queensway Meadows Ind. Estate
Newport, South Wales, NP19 4ST
Tel: +44 1633 636800
sales@tomoe.co.uk