TOMOE

A variation of model 731/732X with vulcanized rubber lining on the body for use in high pressure, high velocity and industrial vacuum applications

731P Wafer

732P Wafer

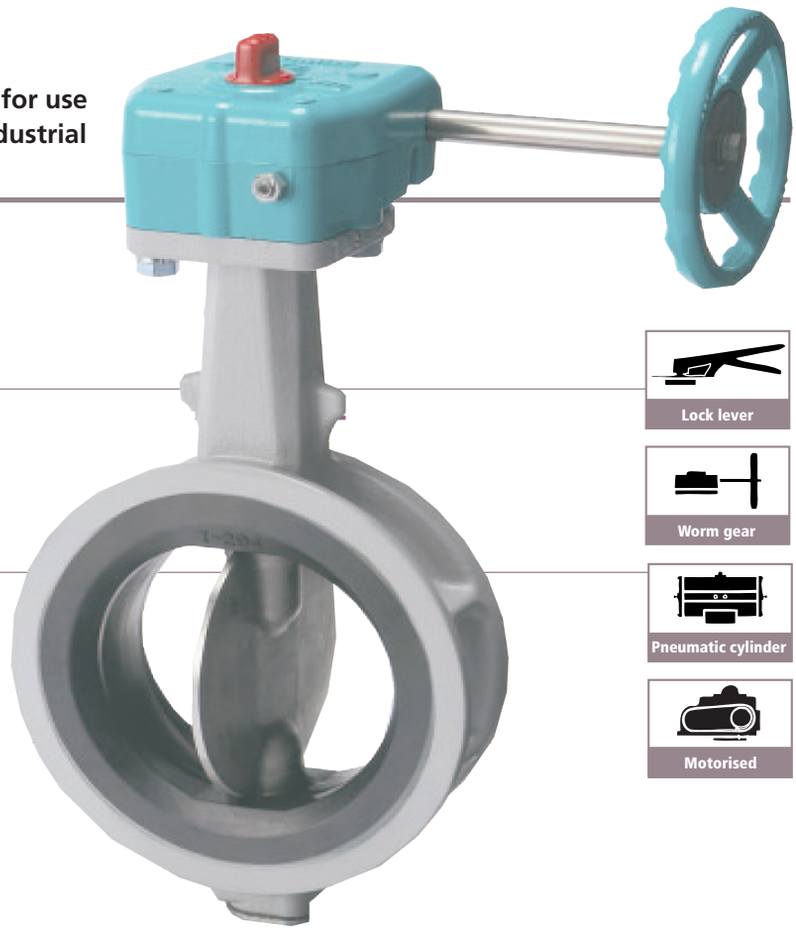

Features and benefits

Vulcanized rubber lining on the body

The seat is vulcanized to the body which ensures correct rubber compression and greater strength of the rubber seat. This design is much more effective in high velocity and industrial vacuum applications than soft resilient seated valves.

New cosine-curve seat

The new cosine-curve seat (patent pending) allows better performance in reducing friction, torque and wear than the previous design.

Cubical shape by lowering height

The height of the raised part of the seat in the narrow area is lower. It provides strength and sealing performance by preventing the movement of the raised portion of the seat in high pressure applications.

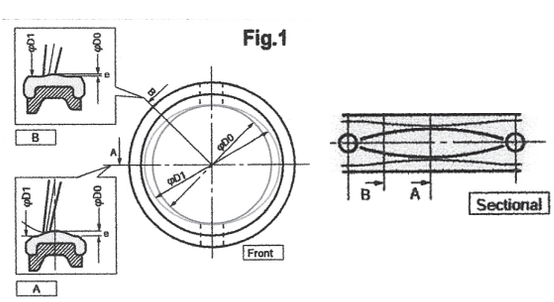

Tapered finish

To make the flow characteristic at small valve opening as close to linear as possible, the edge of the seat is tapered. This makes for a smoother flow and better performance in high velocity working conditions. The taper is narrow around the stem area and wide around the wing of the disc area to provide strength and sealing performance for the rubber seat.

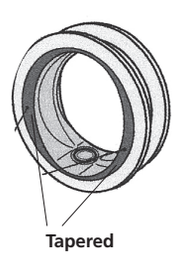

New streamlined shape around stem hole

Although the spherical disc provides good sealing performance and extended life for our rubber lined valves, it still produces relatively high forces around the stem hole area where a large contact surface exists. In order to produce greater pressure at this point of contact with less friction, we incorporate a labyrinth effect where six small raised lines are moulded around the stem hole.

TOMOE

731P/732P Wafer

Features a concentric design with tight 100% bi-directional shut-off, low torque and a maximum working pressure of 1.6MPa to 2.0MPa.

Standard Specification

		1.6MPa (16K) type	2.0MPa (20K) type
Valve nominal size		731P (Wafer)	732P (Wafer)
		50mm to 300mm	50mm to 300mm
Applicable flange standard		JIS 10K, 16K, 20K ANSI 125, 150lb DIN NP 10, 16, 25 BS 4504 PN 10, 16, 25	
Face-to-face dimensions		JIS B 2002 (2032) 46 series / ISO 5752 (20 series) / BS5155	
Max. working pressure		1.6MPa	2.0MPa
Body shell test (hydraulic)		2.4MPa	3.0MPa
Seat leak test		1.76MPa	2.2MPa
Velocity range		Max. 6m/sec	
Vacuum condition		2.0 torr or over	
Working temperature range		NBR : -10 to 80 degrees C, *EPDM : -20 to 120 degrees C	
Working temperature in continuous use #1		NBR : 0 to 60 degrees C, *EPDM : 0 to 100 degrees C	
Standard materials	Body	Ductile iron (FCD450 / A395), Carbon steel (SCPH2 / WCB)	
	Disc	Stainless steel, SCS14 / CF8M	
	Stem	420J2 S.S, K-MONEL	
	Seat ring	NBR, *EPDM	
Actuators	Lock lever	50mm to 200mm	
	Worm gear	50mm to 300mm	50mm to 300mm
	Pneumatic cylinder		
	Motorised		
Coating		50mm to 300mm : Epoxy primer (Munsell N7)	

#1 'Working temperature in continuous use' stands for the temperature continuously kept exceeding one hour.
A resin column for condensation free applications is available.
Disc with pin finish is also available upon request for 732P.
Lug type is available with ANSI 125/150 lb. For other standards, please consult us.
*** Never use an EPDM rubber seat ring if the valve is being used for oil or for a fluid containing even a slight amount of oil.**

Tapered Finish

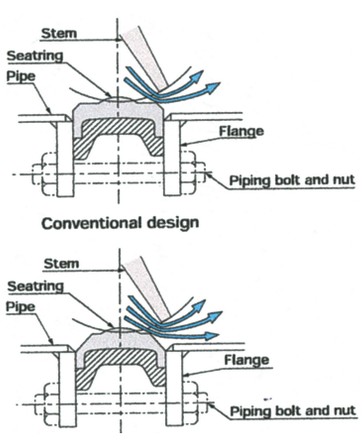

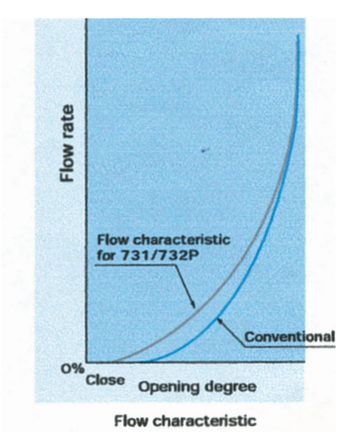

New streamline shape around stem hole